THERMAL CONDUCTIVITY OF TIMBER FRAMED WALLS INSULATED WITH REED

Prof. Jaan Miljan
Estonian University of Life Sciences

Estonian University of Life Sciences

Institute of Forestry and Rural Engineering, Department of Rural Building

Jaan Miljan, Professor of Rural Building

Natural building materials is one direction of our research work

Reed plate

λ = 0,070 W/mK

Reed shives

λ = 0,074 W/mK

Test walls in the window openings

Loose-fill horisontal reed

U=0,145 W/m²K

Reed blocks

U= 0,148 W/m²K.

Test house with reed insulation was constructed (funded by CB Interreg IVa project Cofreen)

Plan and cross-section of the test house

Plan of the test house

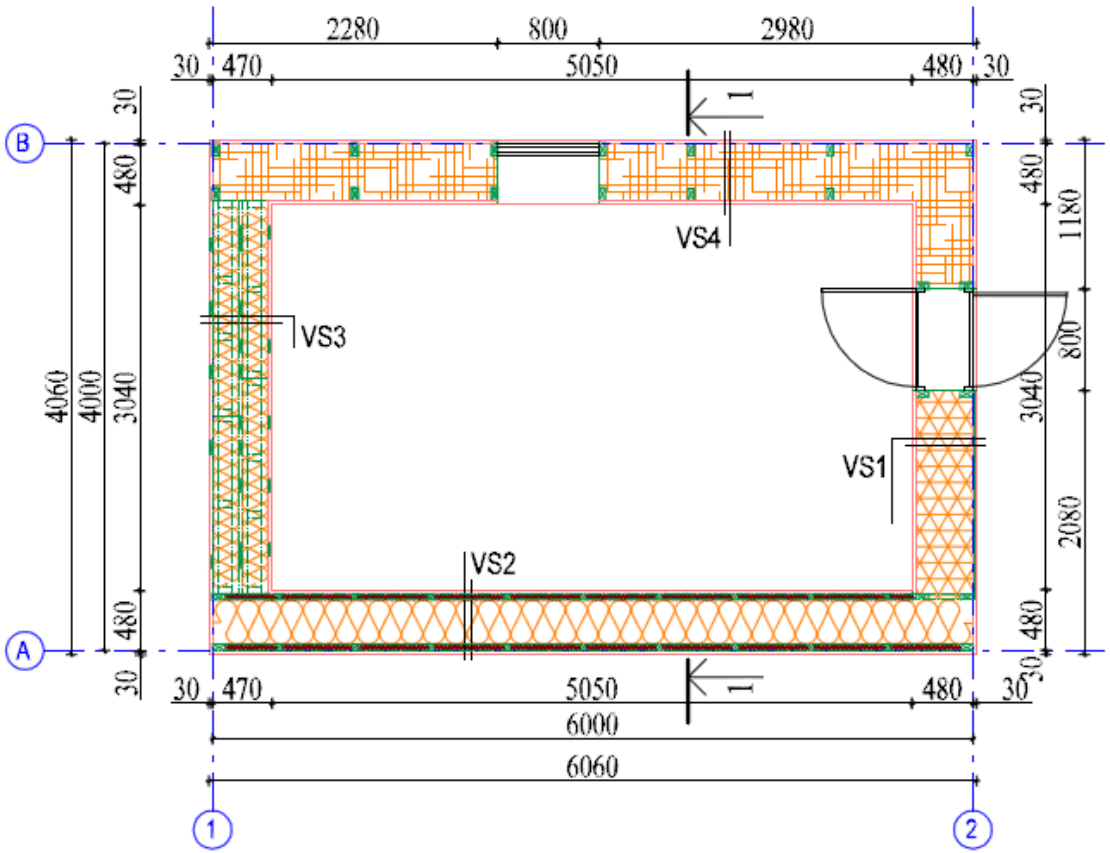

Cross-section 1 - 1 of the test house

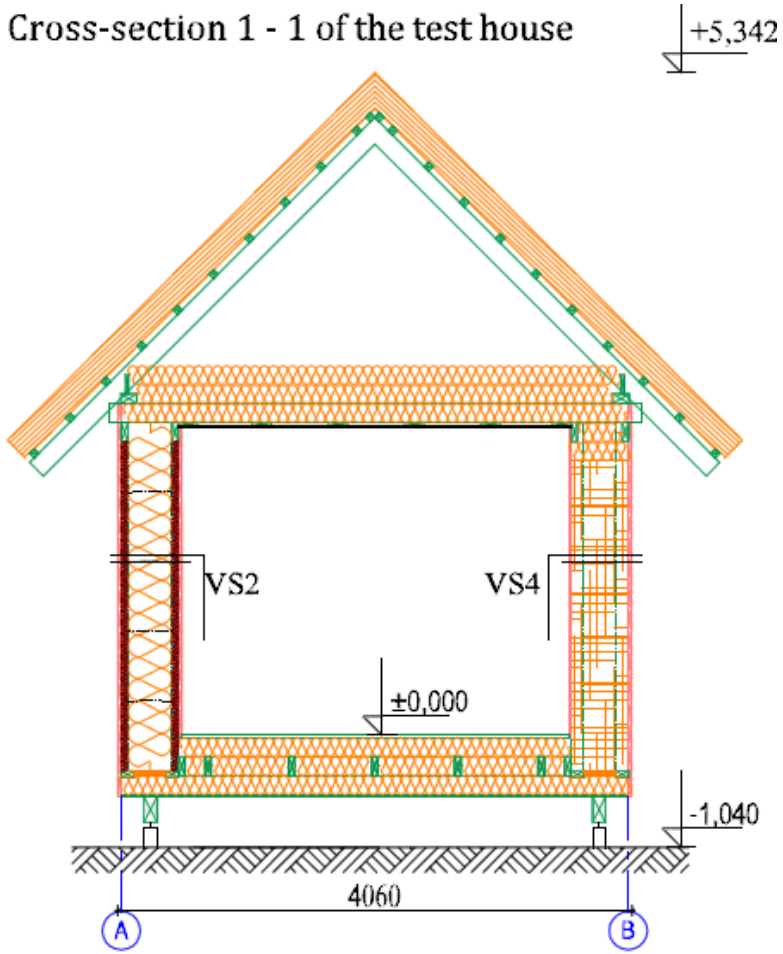

VS-1 wall with vertically laid reed

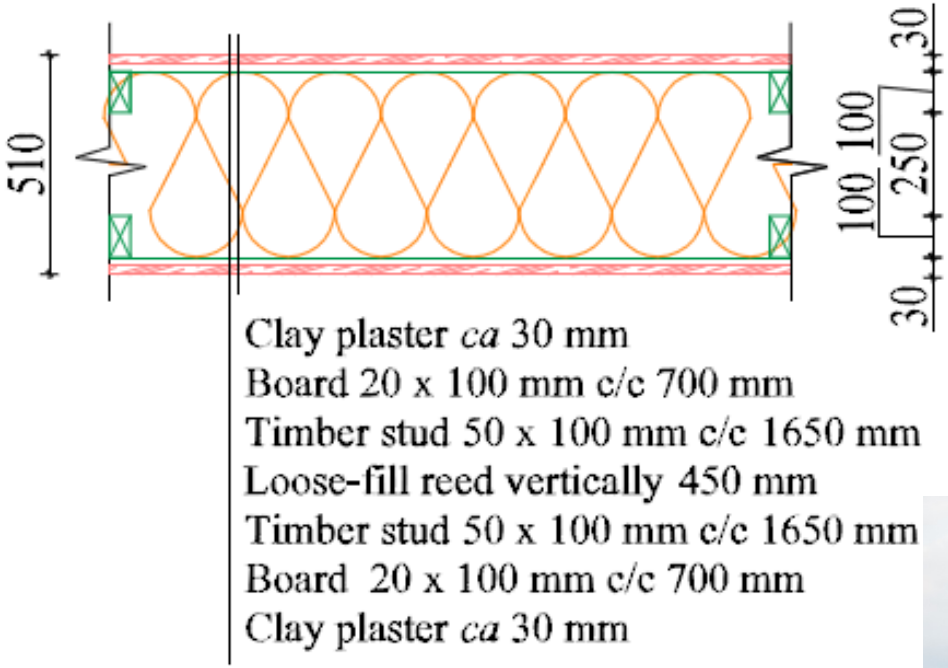

VS-2 wall with horisontally laid reed

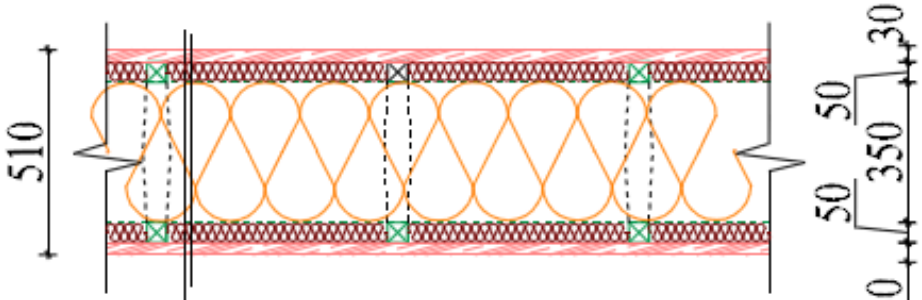

Clay plaster *ca* 30 mm
Timber stud 50 x 50 mm c/c 600 mm, reedboard 50mm
Loose-fill reed horisontally 350 mm
Timber stud 50 x 50 mm, c/c 600 mm, reedboard 50mm
Clay plaster *ca* 30 mm

VS-3 reed panel wall

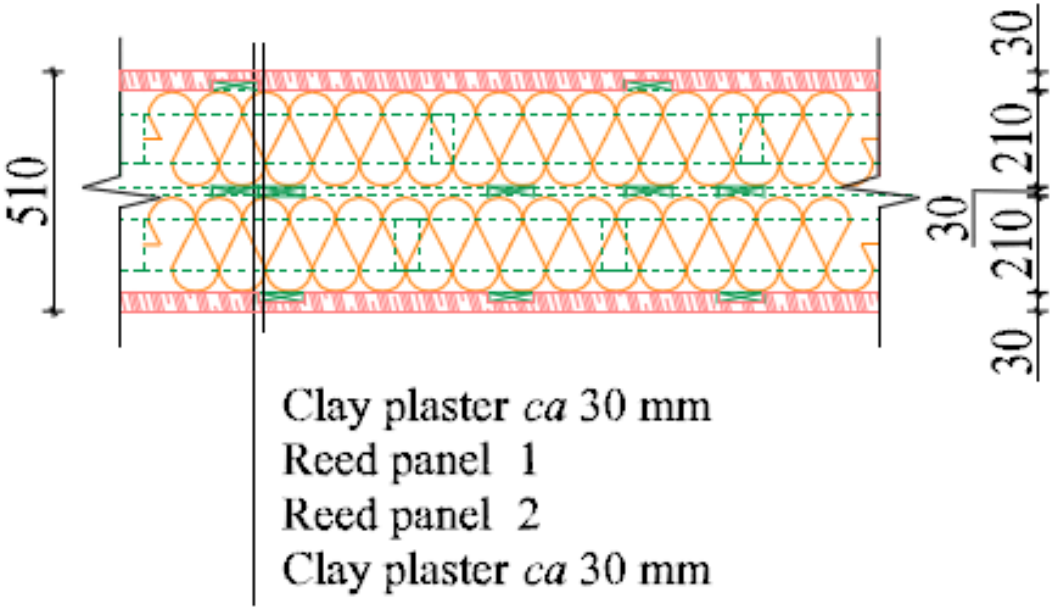

VS-4 reed block wall

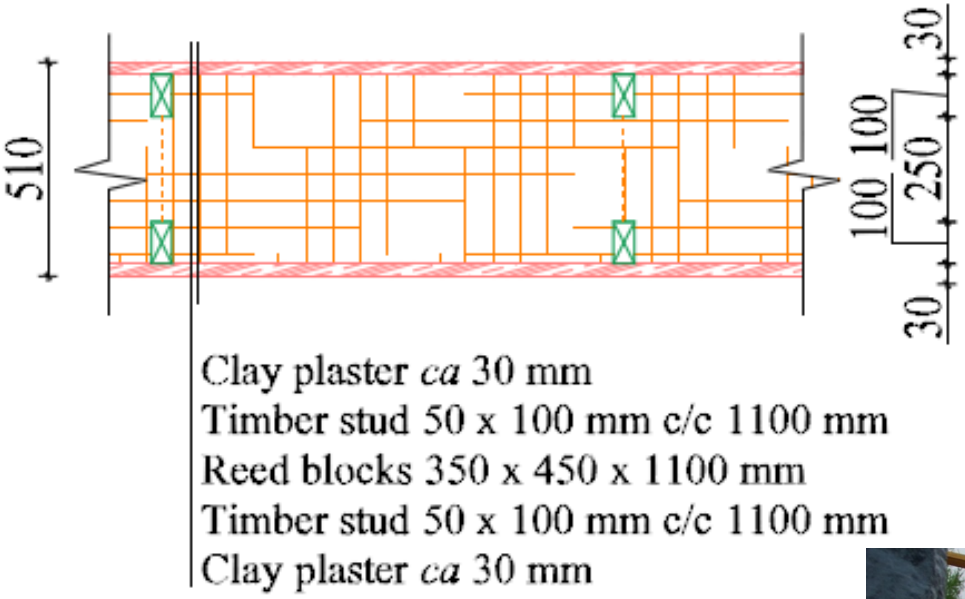

The walls of the test house were covered with clay plaster

Amount of materials per one wall with different structure and per one square meter of the wall

Wall´s mark	Wall´s area m²	Amount of materials per one wall and per 1 m² of the wall													
		Reed board m²		Reed bundle pcs		Reed block pcs		timber m/ and m³						Clay plaster kg	
								50 x 50 mm		50 x 100 mm		20 x 100 mm			
		together	per 1 m²	together	per 1 m²		per 1 m²	together	per 1 m²	together	per 1 m²	together	per 1 m²	together	per 1 m²
VS-1	5,0			72	14,45					5,6/	1,12/			538	108,0
										0,028	0,00056				
VS-2	16,8	31	1,85	270	16,1			56/	3,33/					2016	120,0
								0,14	0,0083						
VS-3	8,6			172	20			25/	2,91/			56/	6,51/	1042	121,2
								0,063	0,0073			0,112	0,0013		
VS-4	18,6					38	2,6			39,2	2,10			2242	120,2

Construction time in hours per one square meter of the wall

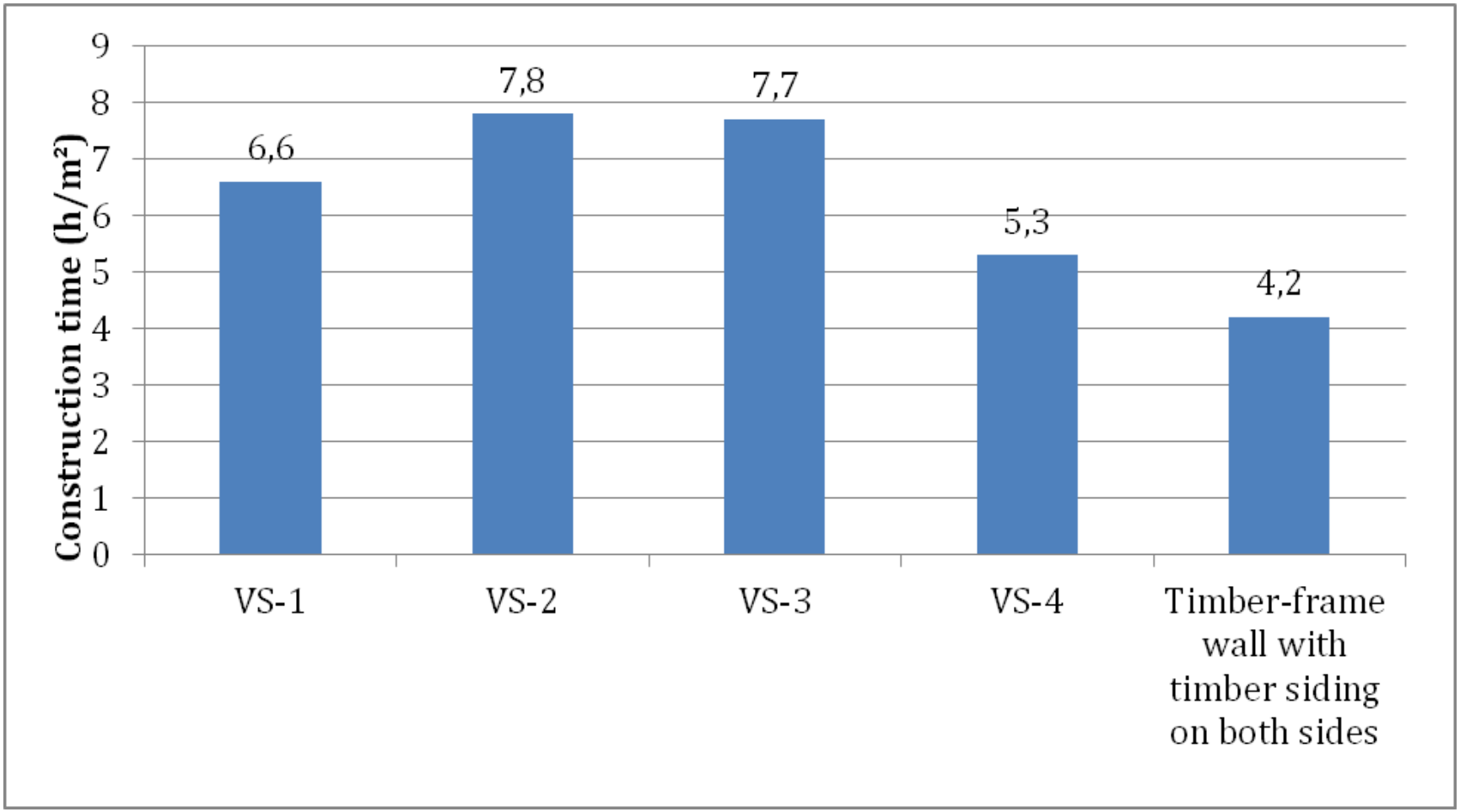

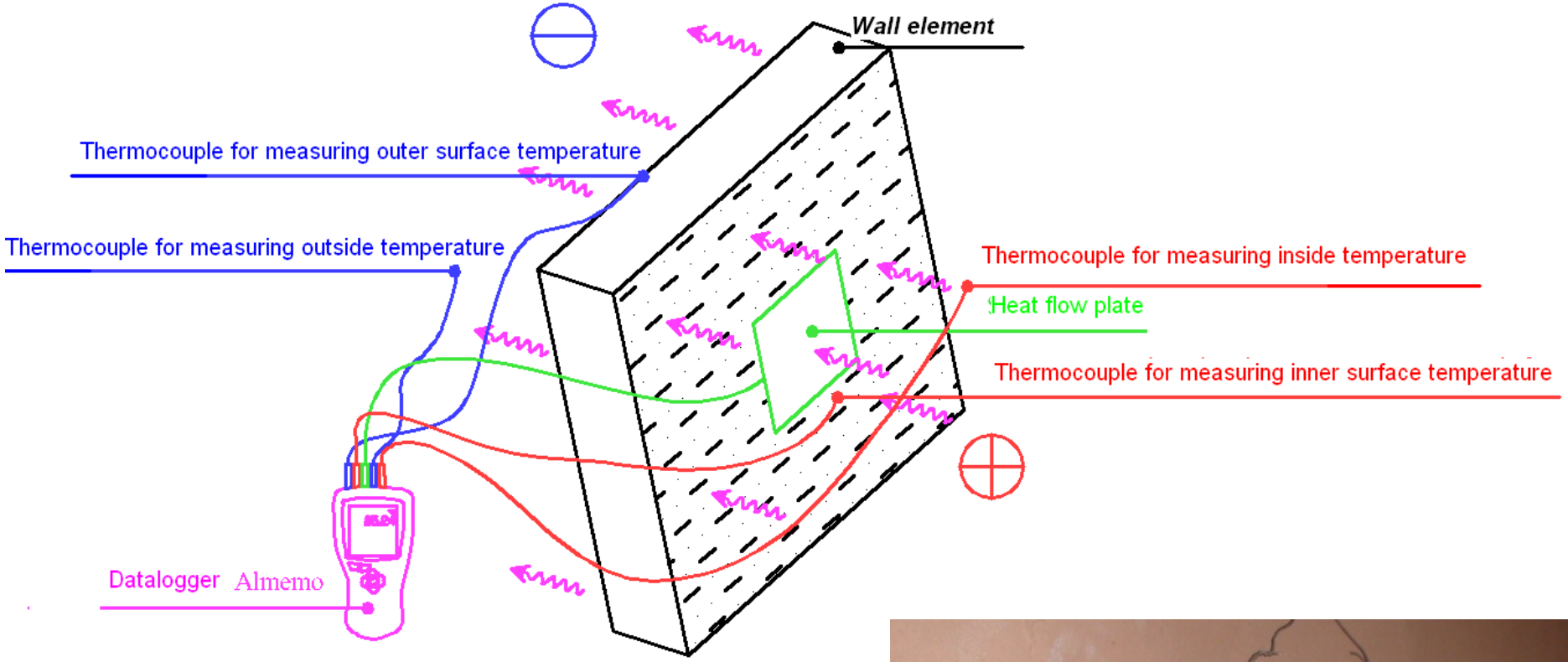

Measuring of heat flow

Thermal transmittance of different test walls

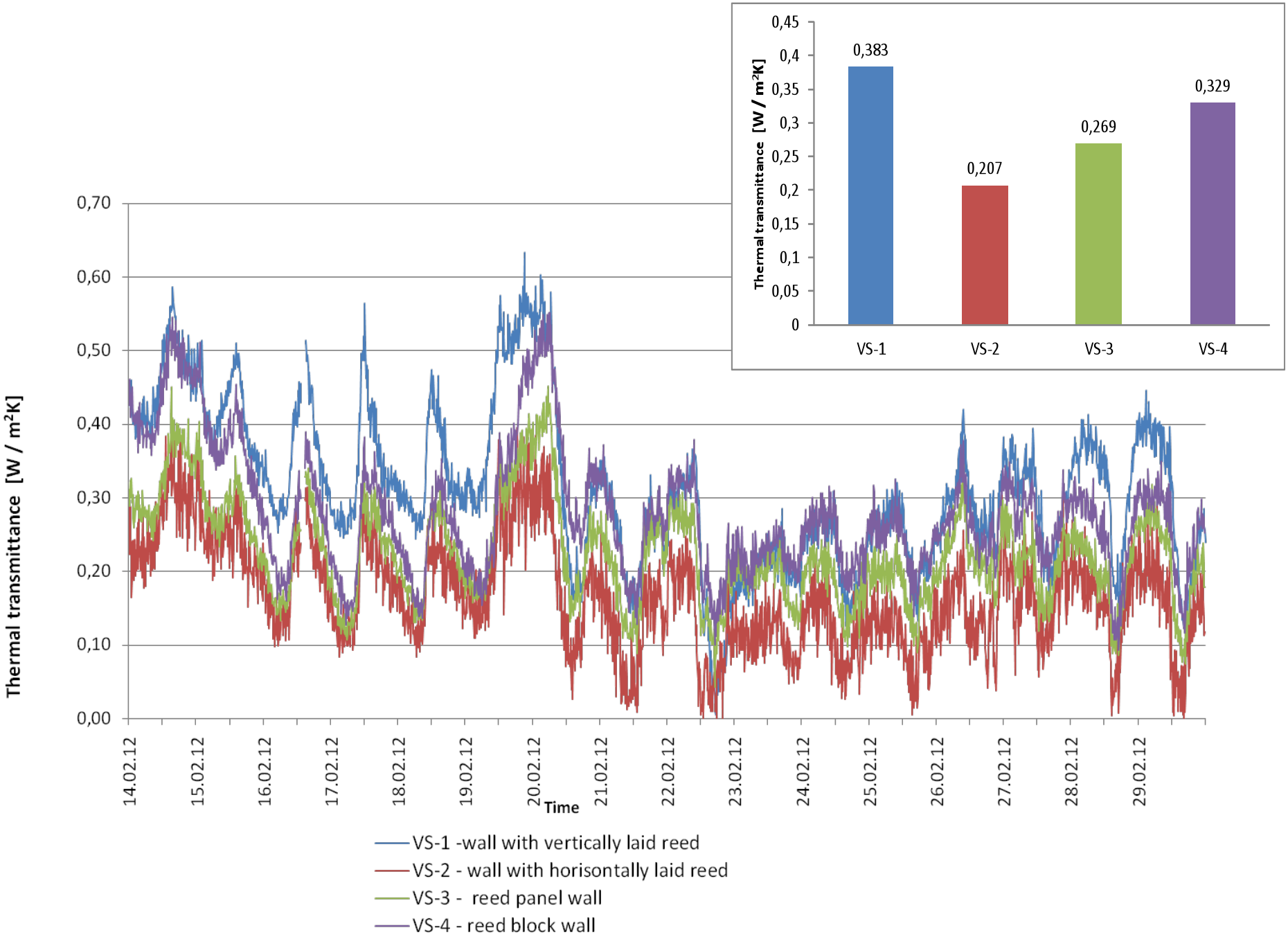

Results:

- The results of our tests showed that horisontally laid loose-fill reed is the best way to use reed as insulation material.
- The cheapest and quickest method to use reed as insulation material was the reed bales.
- The research will continue winter 2012/2013

The best and the cheapest solution to use reed as infill for timber-framed walls is:

- to use reed, which is not suitable for thatching as a horizontal infill
- to make reed bales from reed, which is by-product from making reed plates or roof thatching.

Thank you for your attention!